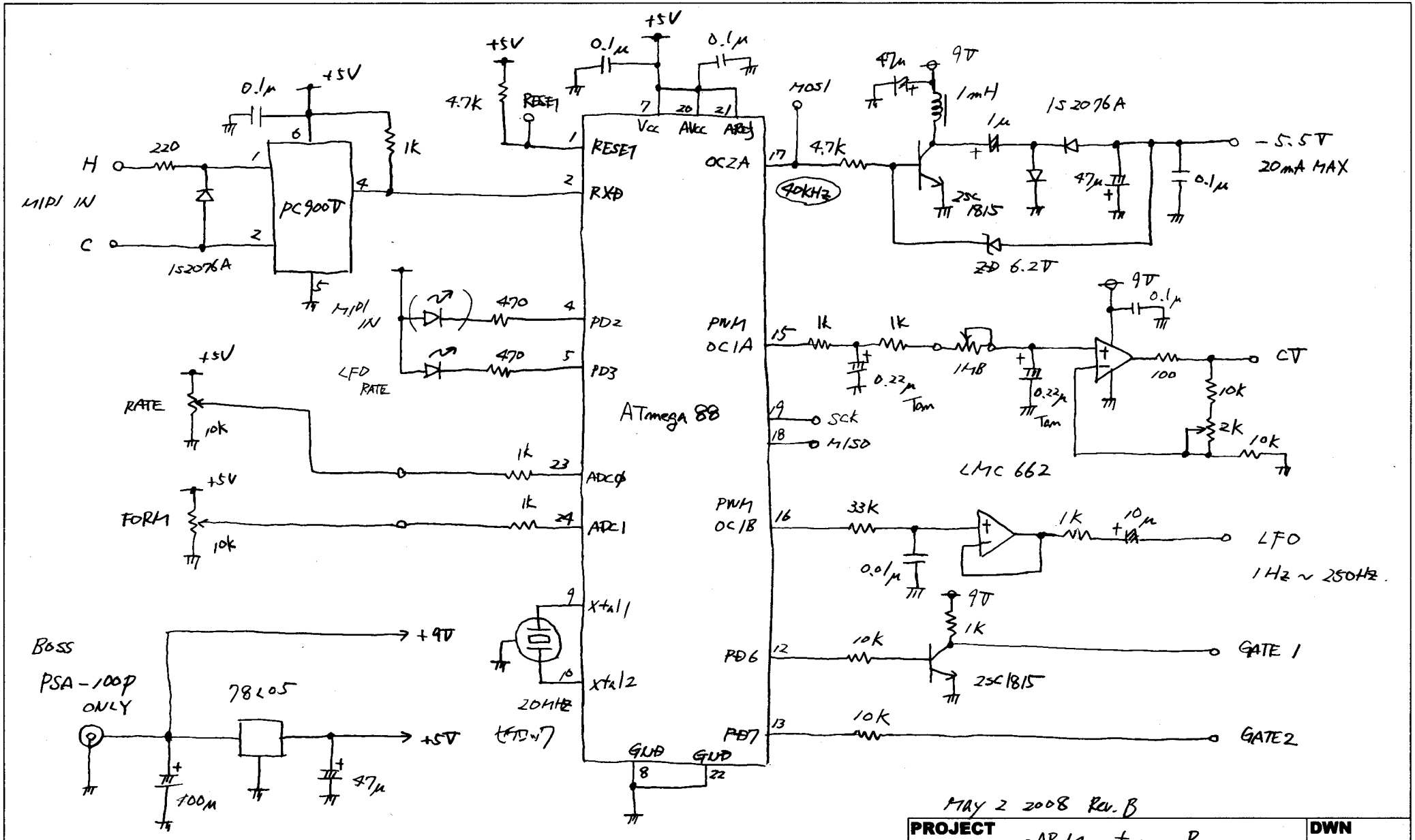

May 2 2008 Rev. B

PROJECT	pARM type-R	DWN
TITLE	MIDI Interface with LFO, PS	REV B
DATE	APR. 28. 2008	Radio Junk Box