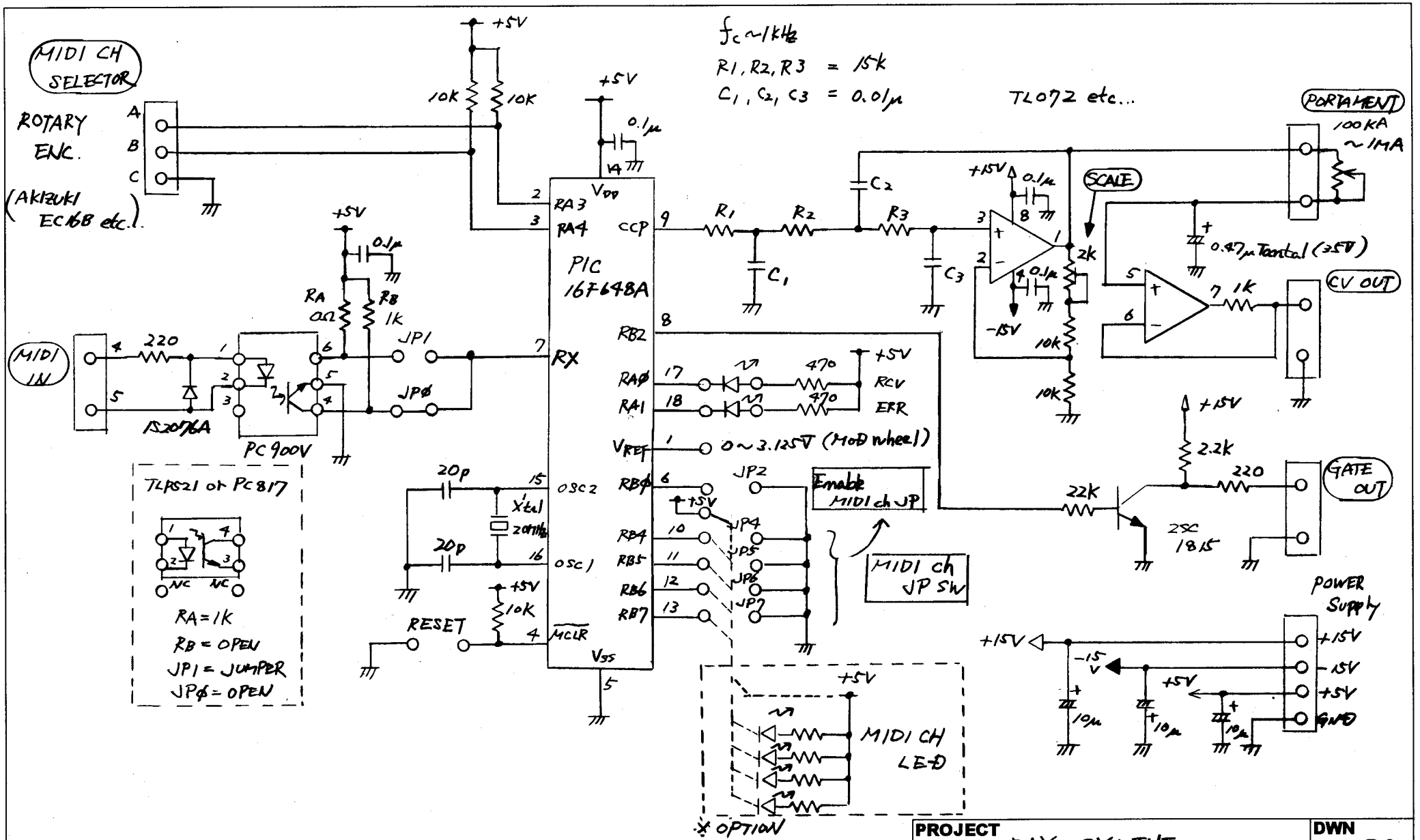

PROJECT	DIY SYNTHE	DWN 0070
TITLE	EZ PWM MIDI-CV 2	REV A
DATE Jan. 2. 2006	Radio Junk Box	